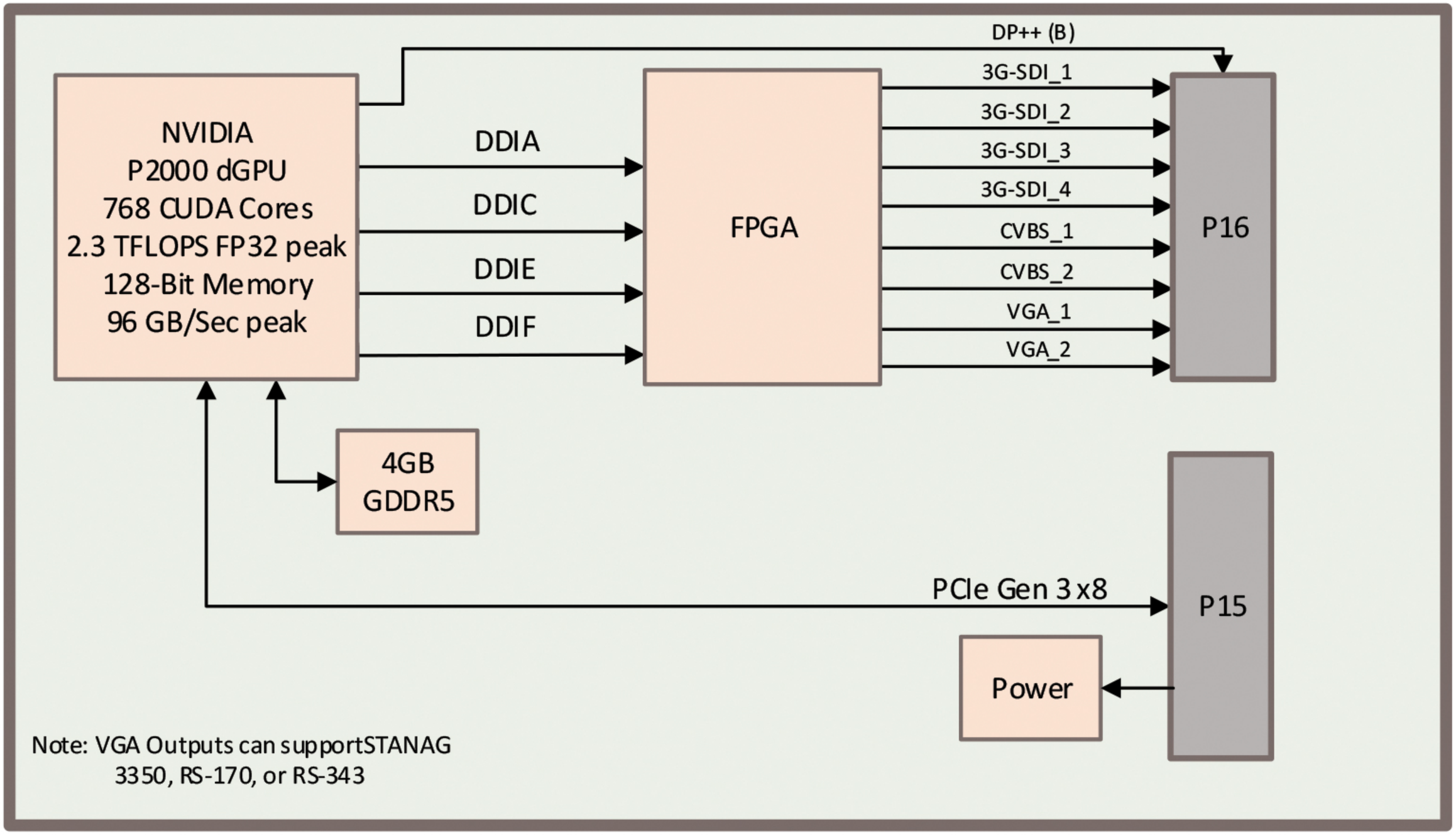
DP++ (B)
NVIDIA
P2000 dGPU
768 CUDA Cores
2.3 TFLOPS FP32 peak
128-Bit Memory
96 GB/Sec peak
DDIA
DDIC
DDIE
DDIF
FPGA
3G-SDI_1
3G-SDI_2
3G-SDI_3
3G-SDI_4
CVBS_1
CVBS_2
VGA_1
VGA_2
P16
4GB
GDDR5
PCIe Gen 3 x8
P15
Power
Note: VGA Outputs can supportSTANAG
3350, RS-170, or RS-343